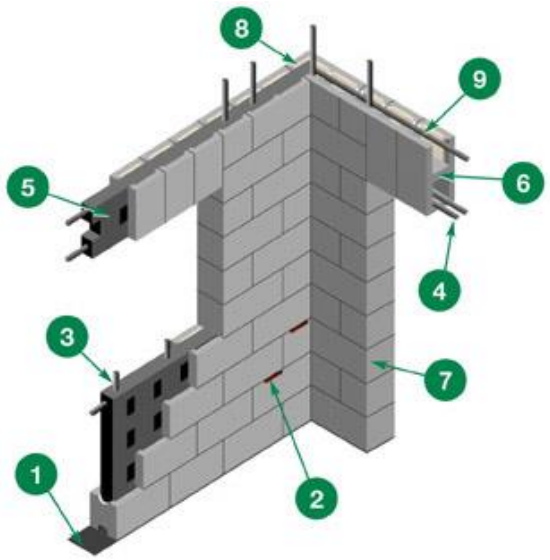

1. Optional Mortar Bed

It is recommended that the first course of Durisol Wallforms be set in a ½" bed of mortar. It is also possible to substitute mortar with other leveling materials, if desired. This leveling bed will allow the first course to be set perfectly level and make the construction of subsequent courses easier, and faster. All other courses are dry-stacked (without mortar).

2. Leveling Shims

Since there is no mortar between the courses of Wallforms, it will become necessary to compensate for variations between individual Wallform units. It is recommended that every second or third course is leveled as you build, using any one of the following:

- Conventional cedar shims from your local hardware store
- Specialty plastic shims that may be available in your area
- Conventional masonry mortar
- Spray foam or construction adhesive
- Using coarse thread screws (deck screws) to screw the units together (vertically and horizontally). Conventional nails can also be used.

3. Wall Reinforcing

The steel rebar schedule for each wall is project specific and must be designed by a professional engineer.

4. Lintel Reinforcing

Steel rebar over openings is project specific and must be designed by a professional engineer.

5. Concrete Fill

Typical Concrete designs range between 17 MPa – 25 MPa (2500 psi – 3600 psi) and use a max 3/8" aggregate size. Download our construction specification document for more information.

6. Lintel Form (Cut on-site)

Lintel Wallforms are created on-site by removing the webs from a conventional Square End unit and turning the block 90 degrees so that the closed end is on the bottom.

7. Square End Form

These units are used at the sides of openings to prevent concrete from pouring out during construction. These units are not always necessary and it is also acceptable to use Standard units (without a closed end) in conjunction with conventional wood bucks to frame the openings. Download our Tech guide for details.

8. Corner Form

Corner Forms are specially notched to allow the concrete to flow around the corner into the adjacent wall. Most units measure 24" x 12" to maintain the desired 12" module. Refer to our Product Dimensions for more information

9. Insulation Inserts

All insulation inserts are manufactured from rockwool mineral fibre insulation. We do not use any polystyrene in our products whatsoever.

1.7 Wall Form Shapes and Configurations

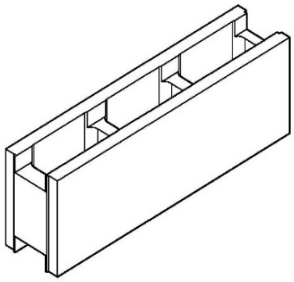

Standard – 3 Core

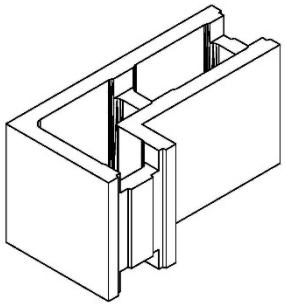

L Corner

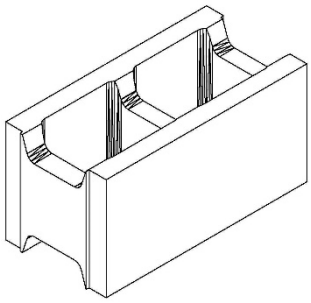

Standard – 2 Core

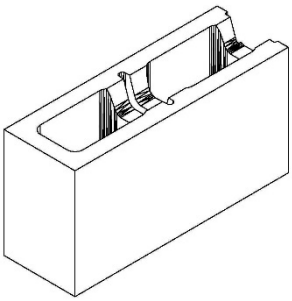

Split End

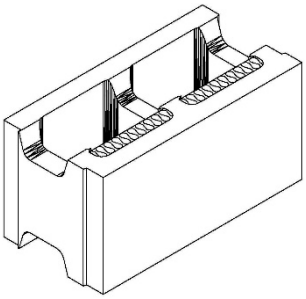

Thermal Standard – 2 Core

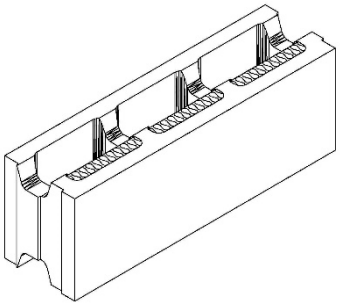

Thermal Standard – 3 Core

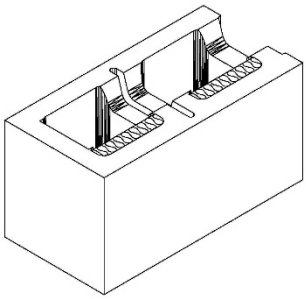

Thermal End

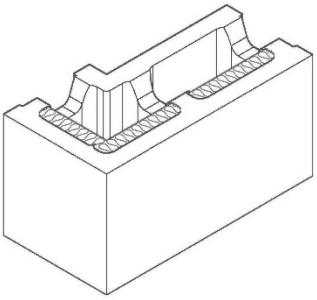

Thermal Outside L Corner

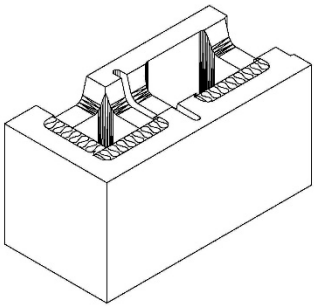

Thermal Outside end-Corner

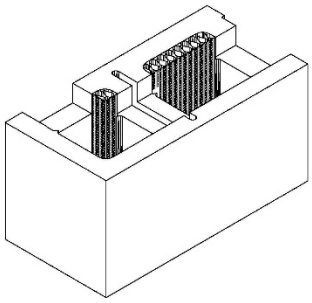

Thermal Inside end-Corner

1.8 Wall System Summary

The following Tables summarize the Wall Forms units available

Table 1.9 – Wall Form Types and Availability (Nominal Dimensions)

Wall Form Shape	Size (height x length)	AVAILABILITY					
		6” WF	8” WF	10” WF	12” WF	14” WF	16” WF
Std 3 Core	(12” x 36”)	×	✓	✓	×	×	×
L - Corner (2 Core)	(12” x 24”)	×	✓	✓	×	×	×
End-Corner (Mod End)	(12” x 24”)	✓	×	×	✓	✓	✓
Split/End (2 Core)	(12” x 24”)	×	✓	✓	✓	✓	✓
Standard 2 Core	(12” x 24”)	✓	×	×	✓	✓	✓

Table 1.10 - Wall System Summary

Wall Thickness	R-Value	Concrete Thickness (in)	Fill Vol. (yd^3 / ft^2)	Weight of Wall (LB / ft^2)	Concrete Thickness (mm)	Fill Vol. (m^3 / m^2)	Weight of Wall (kN / m^2)
6"	8	3	0.0079	48	75	0.065	2.30
8"	8	4 7/8	0.0133	68	125	0.109	3.26
10"	8	6 7/8	0.0180	90	174	0.148	4.32
10"	14	5 3/8	0.0145	74	136	0.119	3.55
12"	8	8 1/2	0.0220	110	216	0.181	5.27
12"	14	7	0.0181	93	178	0.149	4.46
12"	22	5 1/2	0.0142	76	140	0.117	3.64
14"	8	10 1/2	0.0268	132	266	0.221	6.33
14"	14	9	0.0229	115	228	0.189	5.51
14"	22	7 1/2	0.0191	100	191	0.157	4.80
14"	28	5 1/2	0.0139	77	139	0.114	3.69
16”	8	12 1/2	0.0320	155	316	0.263	7.43
16”	14	11	0.0281	138	278	0.232	6.62
16”	22	9	0.0242	122	240	0.200	5.85
16”	28	7 1/2	0.0191	100	189	0.157	4.80
16”	36	5 1/2	0.0139	78	138	0.114	3.74

Note:

- 6” WF is not typically intended for use as a load-bearing wall.
- Shaded area highlights the insulated Nexcem units with sufficient concrete to provide adequate structural capacity for situations requiring greater than 4ft of soil retention (unbalanced fill).